STORAGE

The mantle should be retained in its carton until required for installation and should be kept dry.

PRIOR TO INSTALLATION

1) Check that the surface of the jacket is not damaged in any way (i.e. cut or torn).

2) Ensure that the electrical supply details marked on the rating plate are in agreement with the supply available (i.e. voltage, frequency and network).

3) The heating mantle will have been tested electrically during manufacture but due to the hygroscopic nature of the materials used in construction of the mantle some moisture may have been absorbed during storage which will affect the insulation resistance of the elements.

   Check the insulation resistance of each circuit by using a 500V 'megger'. The reading should not be less than 5 megohms.

   If the insulation resistance is less than 5 megohms the most likely reason will be:

   a) For standard or safe area mantles (Ref: JMD or JMR): wetting of the lagging material.

   b) For hazardous area mantles (Ref: JFD or JFR): ingress of moisture into the MICC cables.

   (In which case place the mantle in a dry atmosphere to dry out)

INSTALLATION OF MANTLE

The base of the mantle is provided with 3 pre-positioned tapped bushes.

1) Insert threaded studs (10m x 75mm long) into tapped bushes and lock with nuts.

2) Assemble 1 extra nut on each stud and install mantle on support frame.

3) Level mantle by raising or lowering on adjusting nuts.

4) Lock mantle to frame by nuts on underside of frame.

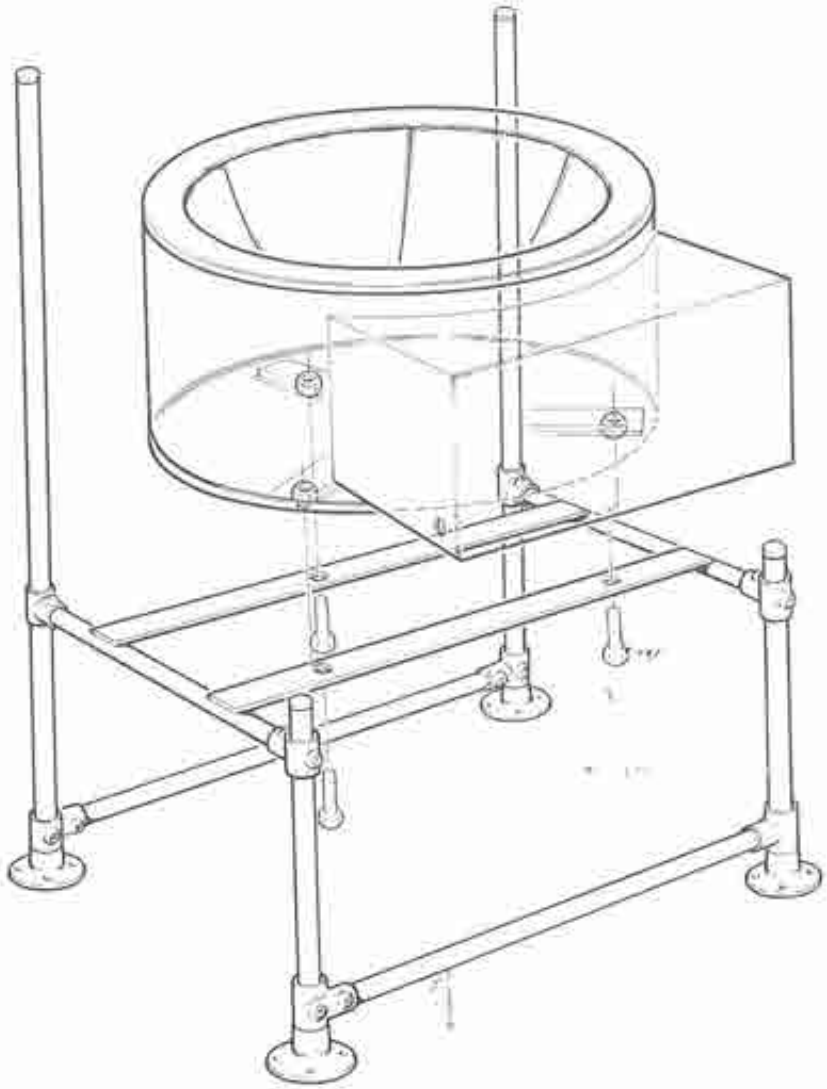

INSTALLATION OF VESSEL

Prior to installation of vessel ensure that the outer surface is clean and dry as the materials of the heating jacket are of a hygroscopic nature and will absorb moisture from the surface of the vessel which may impair the insulation resistance of the element. Furthermore the surface of the vessel will be in intimate contact with the heating surface and the vessel may be damaged when heat is applied.

1) Install glass vessel by lowering carefully into top of mantle.

2) Ensure correct positioning of side necks.

3) Check level of vessel.

4) Fill vessel with water to settle it in the mantle.

ELECTRICAL CONNECTIONS

1 Safe area mantle

1) Remove left hand cover plate from control box.

2) Refer to wiring diagrams on pages 19-21 and check that any necessary links are fitted to the supply terminals (nos. 1, 2, 3, 4, 5, 6) and that it complies with the requirements for the local voltage supply and network.

3) The electrical connection between the mantle and main supply point should be made in MICC cable or conduit.
(This work should be carried out by a competent electrician.)

2 Hazardous area mantle

1) Remove covers from junction boxes on mantle and control panel.

2) Refer to wiring diagrams on pages 22-25 and fit MICC cable and FLP glands between the junction boxes.

3) a) 20 litre mantles - Fit supply cable to energy regulator on side of mantle in either MICC cable and FLP glands or FLP conduit.

   b) 50-200 litre mantles - Fit supply cable to control panel junction box in either MICC cable and FLP glands or FLP conduit. (This work must be carried out by an authorised electrician).

OPERATION

The resistance wires (or heating element) in the QVF heating mantle are divided into zones:

safe area mantle	
20 litre	2 zones
50, 100 and 200 litre	3 zones
hazardous area mantle	
20 litre	1 zone
50 litre	2 zones
100 and 200 litre	3 zones

IT IS EXTREMELY IMPORTANT THAT A ZONE IS NOT SWITCHED ON IF THE LEVEL OF LIQUID IS WELL BELOW THE TOP OF THE ZONE.

The zones can clearly be seen in the mantle jacket because the outline is burnt into the jacket surface during manufacture. There are two reasons why the liquid level might be well below the top of a zone:

1) not enough liquid in the vessel - in which case either fill the vessel up to just above the top of a zone or do not use either that zone or the zone above it if the amount of liquid in the vessel is sufficient only to cover the bottom zone. DO NOT ADD LIQUID IF THE VESSEL IS HOT, but wait for the vessel to cool down or add liquid of a similar temperature to that already in the vessel.

2) evaporation of liquid in vessel - procedure as above. It is important that when operating the mantle, the level of liquid is checked to ensure that it does not drop well below the top of a zone.

If a zone is left on with no liquid covering it, there is a grave possibility that the vessel will become unnecessarily hot in one area and may well be damaged. There is a pre-set thermostat fitted to the top zone of the heating surface and this will switch off the mantle completely if the surface temperature reaches 370°C. When the surface temperature has lowered itself sufficiently, the thermostat will reset itself and the mantle will be automatically switched on again – including the uncovered zone(s), which must be switched off manually.

1 Safe area mantle

20 litre: The heating surface is divided into two equally loaded horizontal zones which are controlled by an energy regulator. In addition the upper zone is fitted with a manual ON/OFF switch.

If the vessel is filled so that the entire heating surface is covered, the energy regulator should be set to give maximum heat input and the upper zone switch turned on. When the desired process temperature has been reached, the energy regulator should be adjusted to suit. When the liquid level falls below the top zone, or if the vessel is only partly filled, the top zone heater should be switched off.

50-200 litre: The heating surface is divided into three equally loaded horizontal zones. Control of the heating surface is by means of an energy regulator connected in the lower zone circuit and manual ON/OFF switches on the centre and top zones.

The vessel should be filled so that the entire heating surface is covered. The energy regulator should be set to give maximum heat input and the upper and centre zone switches turned on. When the desired process temperature has been reached the energy regulator should be adjusted to suit.

2 Hazardous area mantle

20 litre: The heating surface is controlled by an FLP energy regulator mounted on the side of the mantle casing. After filling the vessel, the regulator should be turned on to give maximum heat input. When the desired process temperature has been reached the regulator should be adjusted to suit.

50 litre: The heating surface is divided into two horizontal zones each controlled by a flameproof energy regulator. A surface temperature control is also fitted with the range 130°C-370°C to give overriding control of both zones.

1) Remove cover from surface thermostat and set control to 20°C or 20% less (whichever gives the lower operating temperature) than the spontaneous ignition temperature of process liquid (See table page 17).

2) REPLACE COVER AND TIGHTEN SECURELY

3) Set energy regulators to give maximum heat input and adjust to suit when correct temperature of process has been reached.

100 and 200 litre: Control and operation is similar to the 50 litre mantle except that the heating surface is divided into three independently controlled zones.

FAULT FINDING

Should the heating mantle not be operating correctly, the following check system should be adopted:

1 Safe area mantle

Energy regulator and zone switches on but indicator lights out:

a) Check the main supply is on.

b) Switch off main supply - Remove wires 7 & 8 from terminal strip and check with continuity tester that thermostat is not open circuit. If correct, replace wires and carry on check (c). If thermostat is faulty (i.e. open circuit) replace as set out on pages 8-9.

c) Leave main supply switched off and remove coil fuses. Check with continuity tester and replace fuse if broken (open circuit).

d) Leave main supply switched off and remove chassis from control box. Remove leads from terminals 'line and load' on energy regulator. Connect continuity meter to terminals 'line and load' and turn control switch to position 'full'. If reading on meter is 'open circuit' replace energy regulator.

Indicator lights on but low or no heat:

a) Check that main supply at incoming terminals corresponds to voltage rating of mantle (as shown on rating plate). If different re-arrange links on main terminal block (nos. 1-6) in accordance with wiring diagrams on pages 19-21.

b) Switch off main supply and check relay coils for continuity. If open circuit, remove coil from relay and replace.

c) Leave main supply switched off and check heaters via terminal block for high resistance or open circuit. Replace entire heating surface if high or no reading is obtained (see separate table on page 16 for approximate resistance of elements).

2 Hazardous area mantle

Energy regulators on but low or no heat:

a) Check that main supply is on.

b) Check that main supply at incoming terminals corresponds to voltage rating of mantle (as shown on rating plate). If different, re-arrange connections on terminal block in accordance with wiring diagrams on pages 22-25.

c) Switch off main supply and remove cover of surface thermostat.

   1) Check that control has been turned on and is set to a specific temperature.

   2) With thermostat at any temperature setting check, by using a continuity tester, that all the internal switches have made contact. Change complete FLP enclosure if any fault is found.

NOTE: REPLACE COVER SECURELY BEFORE SWITCHING ON MAIN SUPPLY.

d) Leave main supply off and remove covers from energy regulators.

   1) With regulator in 'full' position check with continuity tester that there is a circuit between terminals 'load and line'. Replace complete FLP enclosure if any fault is found.

   2) Check heater circuit for higher resistance or open circuit by means of continuity tester between terminals 'load & neutral'. If high resistance or open circuit, replace element. (See separate table on page 16 for approximate resistance of elements.)

NOTE: A) REPLACE COVERS OF ENERGY REGULATOR ENCLOSURES BEFORE SWITCHING ON.

B) When ordering replacement elements please specify the following:
   1) Mantle reference number
   2) Heating zone required (e.g. centre zone)

REPLACEMENT OF HEATING ELEMENTS

1 Safe area mantle

In the event of a failure in the heating surface of a safe area mantle a complete new surface must be installed as it is not possible to repair or replace individual segments due to 'hardening' of the fabric after heat has been applied.
The following procedure should be adopted to replace the heating surface:

a) Turn mantle over so that base is uppermost. Mark a reference line on mantle casing and lip of base plate for correct alignment on re-assembly. Drill out rivets and lift off base plate.

b) Carefully remove lagging and note positioning of lead-out wires. Store lagging in a dry atmosphere (keep lagging in two separate lots).

c) Disconnect element and thermostat (except 20 litre) lead-out wires from terminal strip in control panel and remove thermostat from pocket (not fitted on the 20 litre).

d) Reverse mantle

e) Mark a reference line on mantle casing and lip of top plate for correct alignment on re-assembly.
Drill out rivets holding top plate.

f) Lift off top plate complete with element carrier.

g) Remove screws holding element carrier to top plate.

To re-assemble mantle

h) Assemble heating surface to top ring. Align datum marks on clamp plate and top ring. Clamp together securely by screws and nuts. Refit thermostat in pocket provided, ensuring that terminals are away from element, and replace leads.

i) Gather lead-out wires from respective heating zones and tie together.

j) Pass bunched lead-out wires through respective grommets in mantle casing. Fit top plate, align datum marks (stage e) and rivet to casing.

k) Turn mantle over and fill with first layer of lagging, keeping lead-out wires clear of elements.

l) Fill with remainder of lagging.

m) Fit bottom plate, align reference marks (stage a) and rivet to casing

n) Re-connect lead-out wires to terminal strip in control panel in accordance with wiring diagrams on pages 19-21.

2 Hazardous area mantle

Individual zone elements can be replaced on hazardous area mantles in the event of failure. The following procedure should be adopted.

a) Turn mantle over so that base is uppermost. Mark a reference line on mantle casing and lip of base plate for correct alignment on re-assembly. Drill out rivets and lift off base plate.

b) Carefully remove lagging and note position of lead-out wires. Store in a dry atmosphere. (Keep layers of lagging in 2 separate lots.)

c) Remove thermostat bulb from pocket in heating surface. (50 - 200 litre models only)

d) Reverse mantle.

e) Remove metal facia surrounding thermostat and junction box enclosures (20 litre excepted).

f) Remove covers from enclosures and disconnect element lead-out wires.

g) Unscrew flameproof glands and remove lead-out wires from enclosures.

h) Mark a reference line on mantle casing and lip of top plate for correct alignment on re-assembly.

i) Drill out rivets securing top plate to mantle casing.

j) Lift off top plate complete with element carrier.

k) Remove faulty element from pocket on element carrier.

To re-assemble mantle

l) Check that length of element between cold junctions are the same as that removed at stage k. Extend or shorten as required and insert pre-formed element into pocket on carrier.

m) Fit top plate, align datum marks (stage h) and rivet to mantle casing.

n) Turn mantle over and fit thermostat bulb to pocket on element carrier. Fill with first layer of lagging keeping lead-out wires clear of elements.

o) Pass lead-out wires and glands through holes in mantle casing. Fill with remainder of lagging.

p) Fit bottom plate. Align reference marks (stage a) and rivet to casing.

q) Screw glands into enclosures and re-connect lead-out wires in accordance with wiring diagrams on pages 22-25.

r) Fit enclosure covers securely and fit metal facia.

OTHER PROBLEMS

If you are unable to trace or rectify a fault, contact your local Corning company or distributor. DO NOT return your mantle unless requested to do so.

ALL spare parts should be obtained from the sources described above.

POSSIBLE REASONS FOR FAILURE OF GLASS VESSEL

The glass vessel may break if subjected to extreme temperature differential. The following points should be observed:

1) Do not introduce a cold liquid into a warm vessel. Either pre-heat the liquid to be introduced or wait until the vessel is at ambient temperature.

2) Do not allow sediments to collect around the bottom of the vessel thus preventing the glass wall from conducting the heat away. This can be avoided by introducing a stirrer or agitator to minimise sediments forming or by cleaning the vessel at regular intervals to prevent a serious level of sediment building up.

SAFE AREA MANTLE

The mantle may be used in any area not classified as Division O, I or II.

1) top ring

Secures the jacket (4) by bolts to the clamp plate (6). The top ring is then riveted to the mantle casing (11). This ensures that the jacket cannot sag with the weight of the vessel and lose surface contact which in turn would create hot spots.

2) thermostat

This controls the top two zones and cuts off the electrical supply if the vessel surface temperature reaches 370°C. (The thermostat is not fitted to the 20 litre mantle, which has only two zones controlled by an energy regulator and an on/off switch).

3) resistance wire

The wire runs in a sinusoidal pattern and is sewn on to the bottom layer of the fibreglass jacket. It is arranged in two horizontal zones on the 20 litre mantle and 3 zones on the other models.

4) jacket

This is made of two pieces of fibreglass cloth with the resistance wire (3) sewn to the bottom layer.

5) wiring

Each zone is wired so that the top zone on the 20 litre and top two zones on the other models can be switched on or off independantly.

6) clamp plate

7) control panel wiring

8) front panels

9) switches and indicator lights

The bottom switch is the master control for the entire mantle. It is wired via an energy regulator and this has over riding control of the top two zones when they are switched on.

10) base plate

It is riveted onto the bottom of the mantle casing and has three tapped holes for securing to the support frame.

11) mantle casing

Made of mild steel and sprayed hammer-tone grey.

12) bottom outlet

The bottom outlet of the 20 litre mantle is 75 mm (3"). The 50, 100 and 200 litre models are either 115 mm (4½") or 265 mm (10½"). The three larger mantles are manufactured with a 265 mm outlet and mantles requiring a 115 mm outlet will have an unheated 'plug' (not shown) inserted permanently.

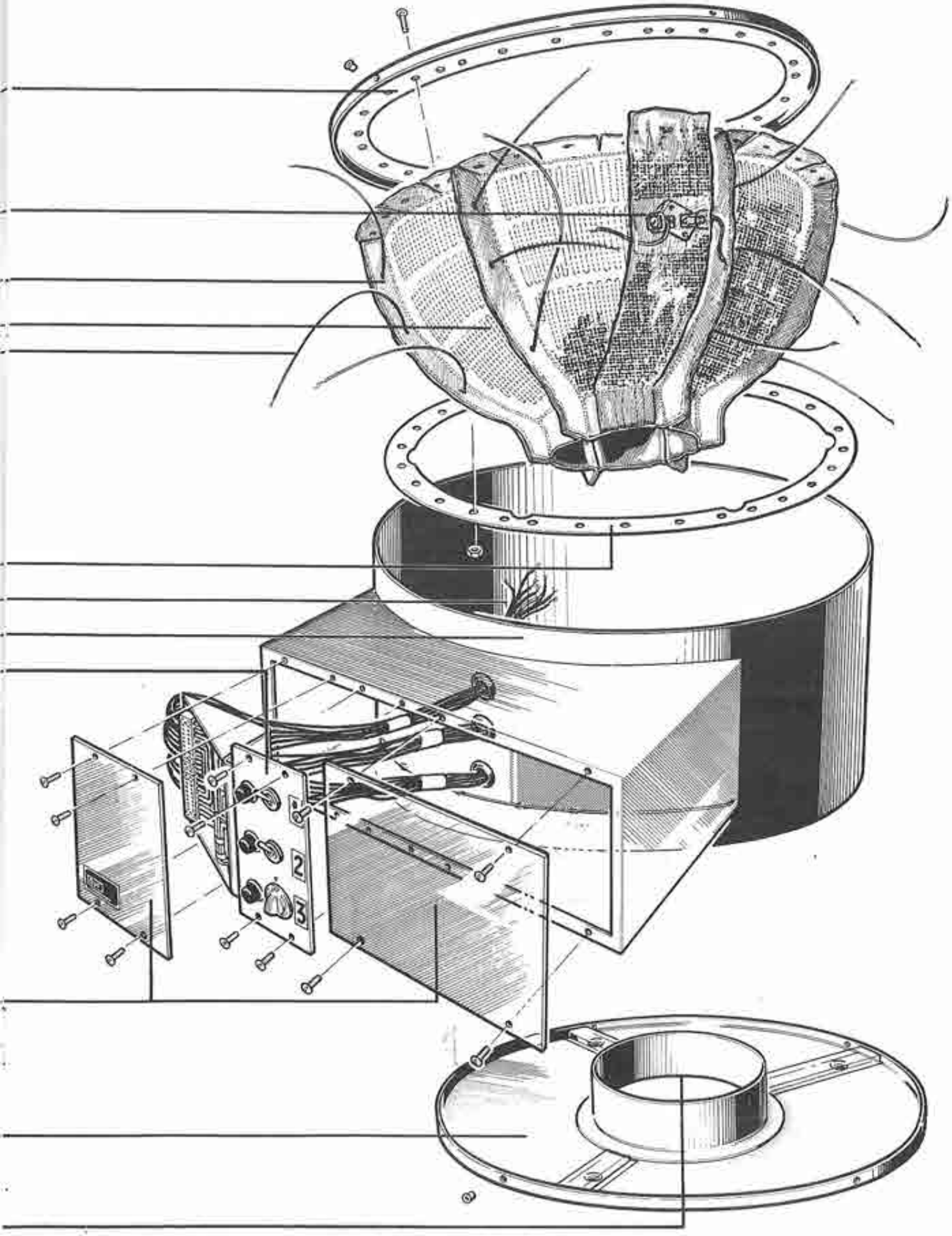
2
3

SAFE AREA MANTLE

The mantle may be used in any area not classified as Division 0, I or II.

1) top ring

Secures the jacket (4) by bolts to the clamp plate (6). The top ring is then riveted to the mantle casing (11). This ensures that the jacket cannot sag with the weight of the vessel and lose surface contact which in turn would create hot spots.

2) thermostat

This controls the top two zones and cuts off the electrical supply if the vessel surface temperature reaches 370°C. (The thermostat is not fitted to the 20 litre mantle, which has only two zones controlled by an energy regulator and an on/off switch).

3) resistance wire

The wire runs in a sinusoidal pattern and is sewn on to the bottom layer of the fibreglass jacket. It is arranged in two horizontal zones on the 20 litre mantle and 3 zones on the other models.

4) jacket

This is made of two pieces of fibreglass cloth with the resistance wire (3) sewn to the bottom layer.

5) wiring

Each zone is wired so that the top zone on the 20 litre and top two zones on the other models can be switched on or off independantly.

6) clamp plate

7) control panel wiring

8) front panels

9) switches and indicator lights

The bottom switch is the master control for the entire mantle. It is wired via an energy regulator and this has over riding control of the top two zones when they are switched on.

10) base plate

It is riveted onto the bottom of the mantle casing and has three tapped holes for securing to the support frame.

11) mantle casing

Made of mild steel and sprayed hammer-tone grey.

12) bottom outlet

The bottom outlet of the 20 litre mantle is 75 mm (3"). The 50, 100 and 200 litre models are either 115 mm (4½") or 265 mm (10½"). The three larger mantles are manufactured with a 265 mm outlet and mantles requiring a 115 mm outlet will have an unheated 'plug' (not shown) inserted permanently.

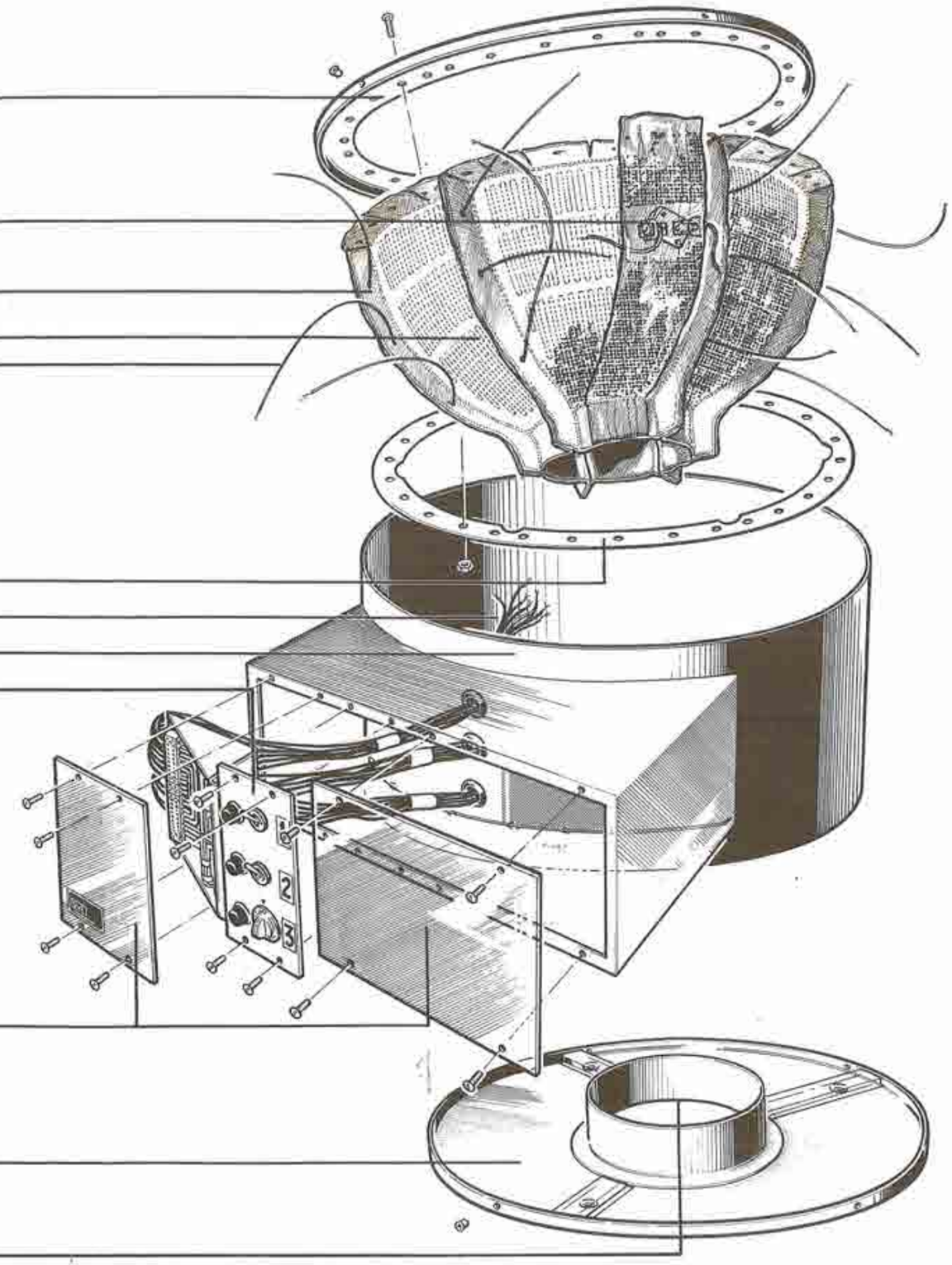

HAZARDOUS AREA MANTLE

The mantle may be used in areas classified as Division I and II. All flameproof enclosures (that is energy regulators, surface thermostats and junction boxes) are BASEEFA certified in accordance with BS 4683 part 2:1971 Type Y: Group IIB: T6 and confirm to the requirements of International Standard IEC 79-1 Exd IIB T6.

1) top ring

Secures the jacket (2) by bolts to the clamp plate (6). The top ring is then riveted to the mantle casing (9). This ensures that the jacket cannot sag with the weight of the vessel and lose surface contact which in turn would create hop spots.

2) jacket

This is made of three pieces of fibreglass cloth with the resistance wire (3) inserted into pockets.

3) resistance wire

The wire is formed in the same sinusoidal pattern as the safe area mantle, but is flameproofed by covering it in mineral insulation and metal sheathing and terminating the wire in cold junctions. The wire is arranged in 1 zone on the 20 litre, 2 zones on the 50 litre and 3 zones on the 100 and 200 litre mantles.

4) thermostat

This is fitted to the 50, 100 and 200 litre mantles only and cover the range 130°C to 370°C. It is housed in a flameproof enclosure on the side of the mantle. The 20 litre mantle has a flameproof energy regulator fitted to its side.

5) cold junction

6) clamp plate

7) wiring

The wiring from the resistance wires to the control box is via copper-covered cold lead-out wires which terminate in flameproof glands.

8) flameproof gland

9) mantle casing

Made of mild steel and sprayed hammer-tone grey.

10) temperature control box mounting

11) temperature control box

Simplex GE flameproof type no. F7102 G1

12) control panel

Simplex GE flameproof type no. F7102 H1 for remote mounting. Each switch controls one zone independantly of the others.

13) base plate

This is riveted onto the bottom of the mantle casing and has three tapped holes for securing the support frame.

14) temperature control junction box

Simplex GE flameproof type no. F7003

15) bottom outlet

The bottom outlet of the 20 litre mantle is 75 mm (3"). The 50, 100 and 200 litre models are either 115 mm (4½") or 265 mm (10½"). The three larger mantles are manufactured with a 265 mm outlet and mantles requiring a 115 mm outlet will have an unheated 'plug' (not shown) inserted permanently

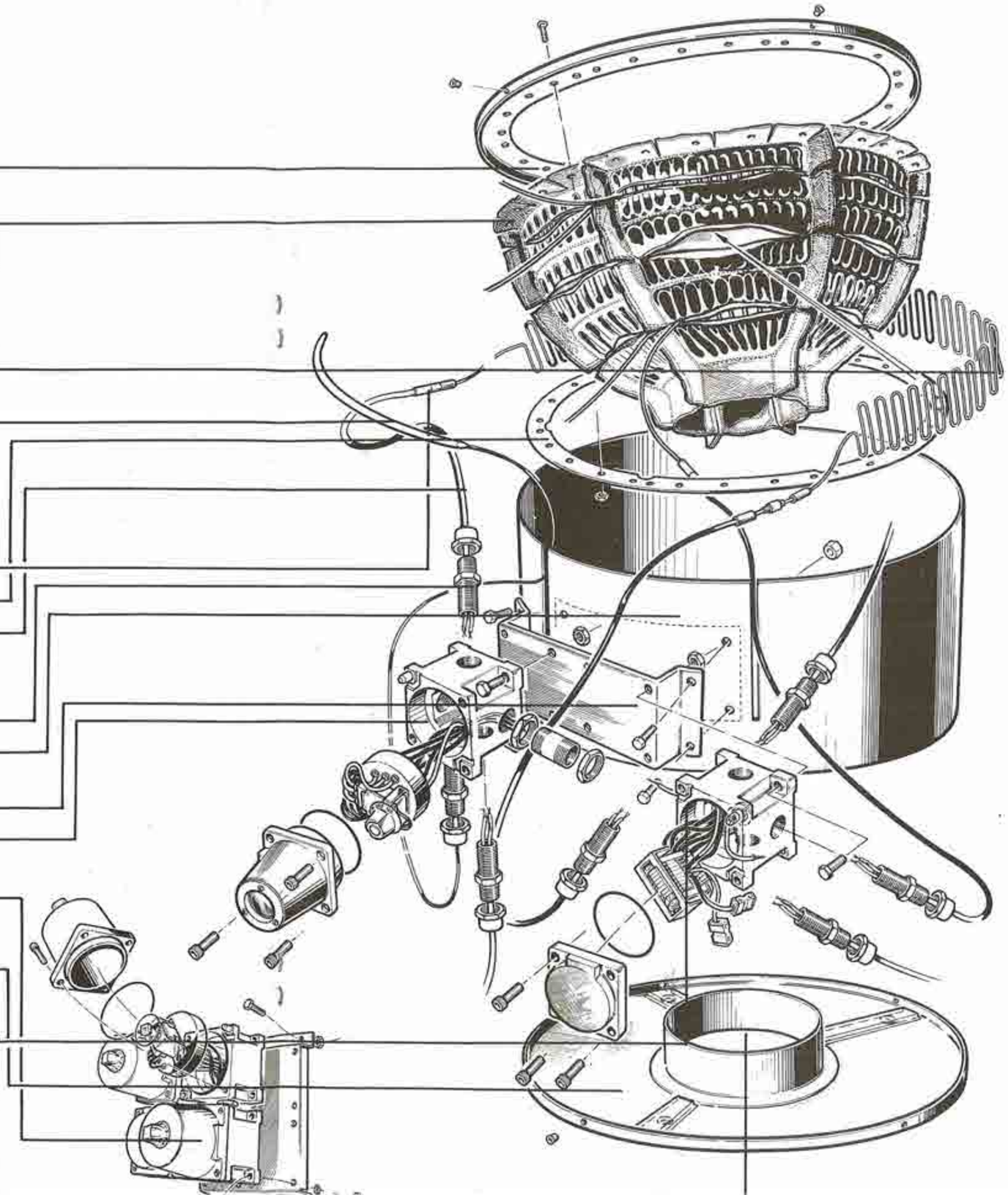

ELECTRICAL SPECIFICATIONS

1 Safe area mantle

Size	Total Heating Load	No. of Controlled Heating Zones	Characteristics Watts	Amps	Per Circuit Resistance
20	2.7 Kw	2	1350	5.8	39.7 Ohms
50(115)	4.5 Kw	3	1500	6.5	35.3 "
50(265)	4.2 Kw	3	1400	6.1	37.7 "
100	6.6 Kw	3	2200	9.5	23.9 "
200	10.8 Kw	3	3600	15.6	14.7 "

CURRENT & RESISTANCE VALUES CALCULATED AT 230V SINGLE PHASE
RESISTANCE VALUES ± 3%

2 Hazardous area mantle

Size	Total Heating Load	No. of Controlled Heating Zones	Characteristics Watts	Amps	Per Circuit Resistance
20	1.6 Kw	1	1600	6.9	34 Ohms
50	3.2 Kw	2	1600	6.9	34.0 "
100	4.8 Kw	3	1600	6.9	34.0 "
200	6.3 Kw	3	2100	9.0	25.5 "

CURRENT & RESISTANCE VALUES CALCULATED AT 230V SINGLE PHASE
RESISTANCE VALUES ± 10%

SOME FLASH POINT AND IGNITION TEMPERATURES

Liquid	Flash Point		Spontaneous Ignition Temperature	
	°C	°F	°C	°F
Acetone	-18	0	535	1000
iso-Amyl Acetate	22.5	73	379	714
Benzene	-11	12	535	1000
prim. n-Butyl Alcohol	35	95	345	635
Carbon Disulphide	-30	-22	110	230
Diethyl Ether	-40	-40	180	356
Ethyl Acetate	-4	24	483	903
Ethyl Alcohol	13	57	392	738
n-Hexane	-21	-7	233	453
Iso-Propyl Alcohol	11	53	456	853
Kerosene	38	100	227	441
Methyl Acetate	-10	14	502	936
Methyl Alcohol	10	50	463	867
Methyl Ethyl Ketone	-7	19	513	957
n-Pentane	-49	-57	287	549
Petrol	-42	-45	248	480
Toluene	4	40	518	966
o-Xylene	17	63	463	867

The above figures have been taken from the Fire Protection Association booklet No. 24 - third edition, 'Industrial Solvents, Flammable Liquids & Low Melting Point Solids'.

FLASH POINT

The flash point of a liquid may be regarded as the lowest temperature at which a liquid gives off enough vapour to form an explosive concentration when exposed to a means of ignition which does not itself appreciably raise the temperature of the liquid.

SPONTANEOUS IGNITION TEMPERATURE (AUTO-IGNITION)

These figures give an idea of the temperature at which, under ideal conditions, spontaneous or auto-ignition will occur.

MAINTENANCE OF FLAMEPROOF APPARATUS

(CP1003 Part 1: 1964 Clause 201 (d) & BS 229: 1957 Clause 2 note 5)

Flameproof apparatus is normally designed for use in reasonably dry situations, and where damp or humid conditions persist or where the apparatus is used under conditions that are likely to cause rusting or other forms of corrosion, special means should be used to counteract such deterioration by the application of protective paint. The use of gaskets is only permissable where these are applied to a joint additional to the flameproof joint and do not interfere with its function.

As the condition of flameproofness depends on the maintenance of the enclosure in its designed condition, it is essential that due attention be paid to this condition at all times, and that corrosion, deformation, or wear of components be remedied before any designed openings or gaps in the enclosure are enlarged beyond the limits laid down.

20 litre wiring diagram

SAFE AREA MANTLE

230V single phase
220V between 2 phases

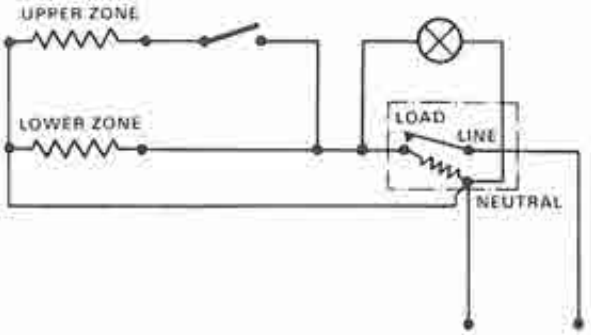

NB. When connecting between 2 phases it is recommended that a double pole isolator is fitted in the supply line.

50,100 and 200 litre wiring diagram

SAFE AREA MANTLE

240V single phase
220V 3 phase 3 wire Δ
380-415V 3 phase 4 wire

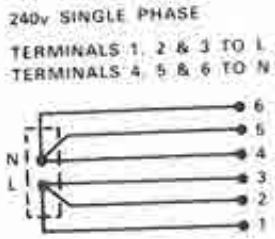

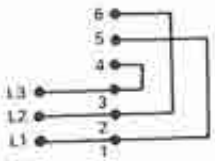

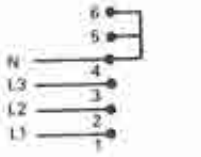

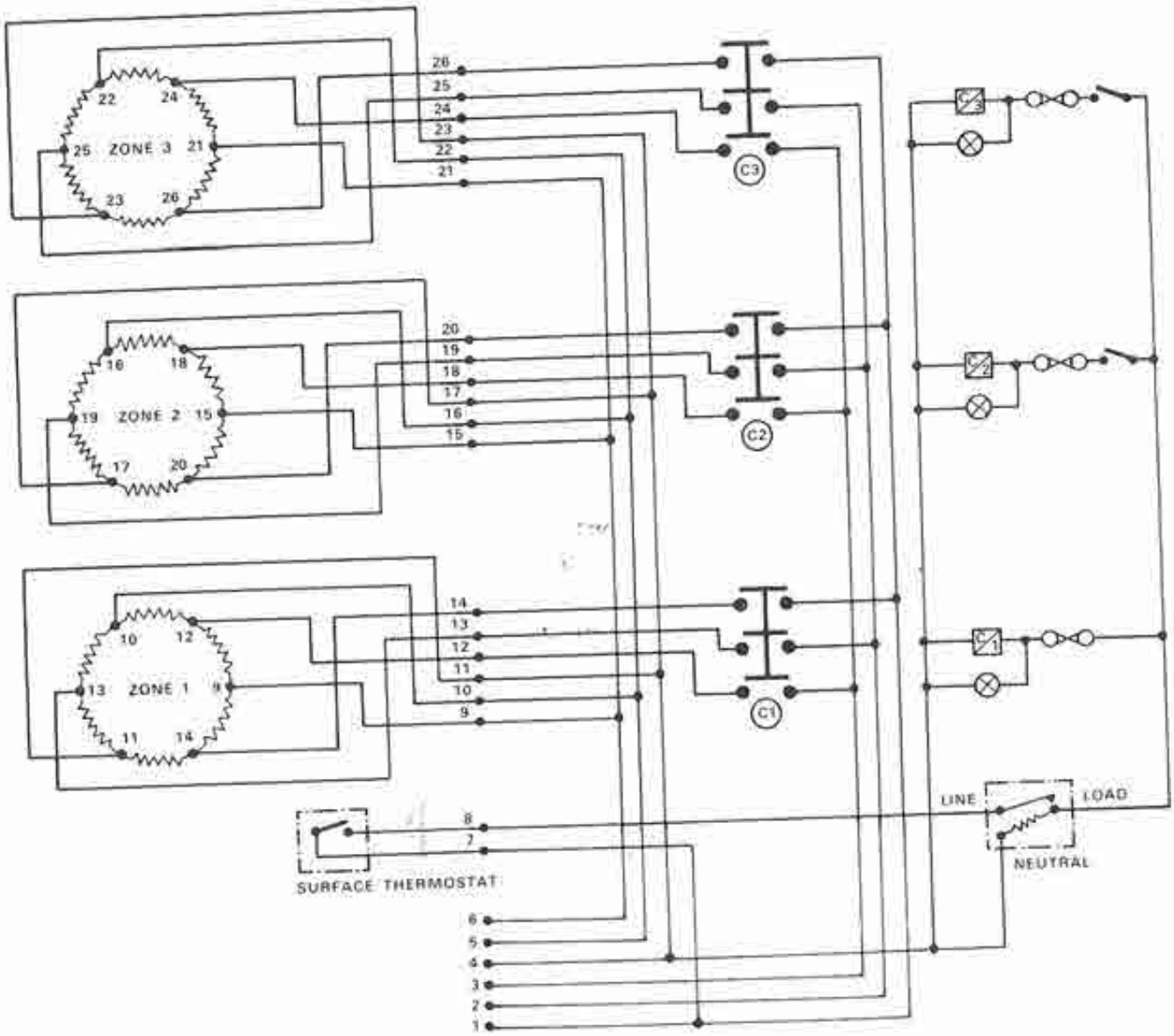

50,100 and 200 litre wiring diagram

SAFE AREA MANTLE

380-415V 3 phase 3 wire

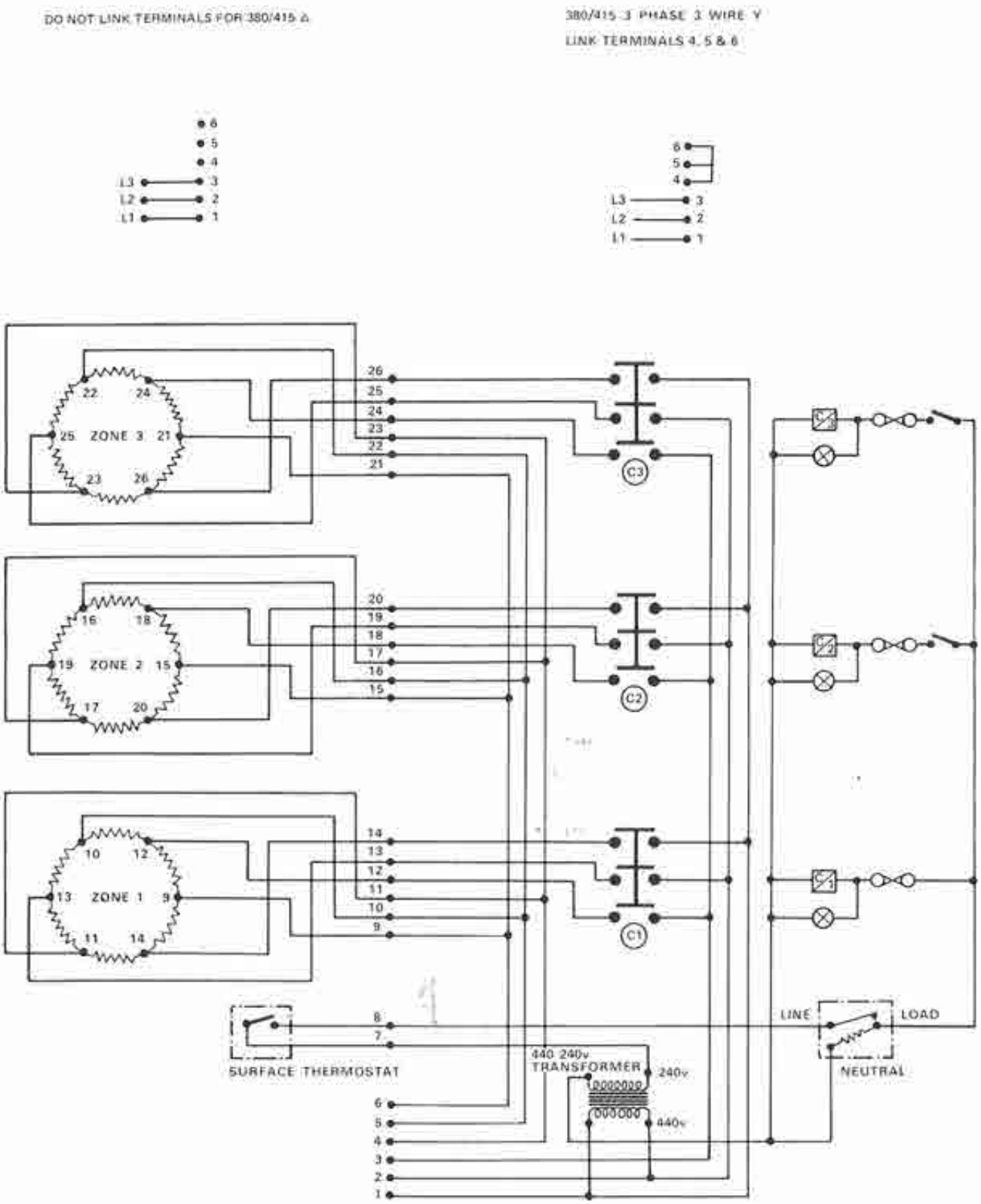

20 litre wiring diagram

HAZARDOUS AREA MANTLE

230V single phase
220V between phases

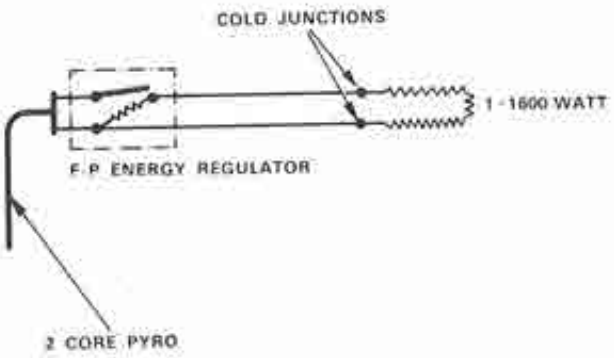

NB. When connecting betweeen 2 phases it is recommended that a double pole isolator is fitted in the supply line. (If the supply point is within the hazardous area, the isolator must be a FLP or Ex (d) unit).

50 litre wiring diagram

HAZARDOUS AREA MANTLE

230V single phase
220V between phases

NB When connecting between 2 phases it is recommended that a double pole isolator is fitted in the supply line.
(If the supply point is within the hazardous area, the isolator must be a FLP or Ex (d) unit).

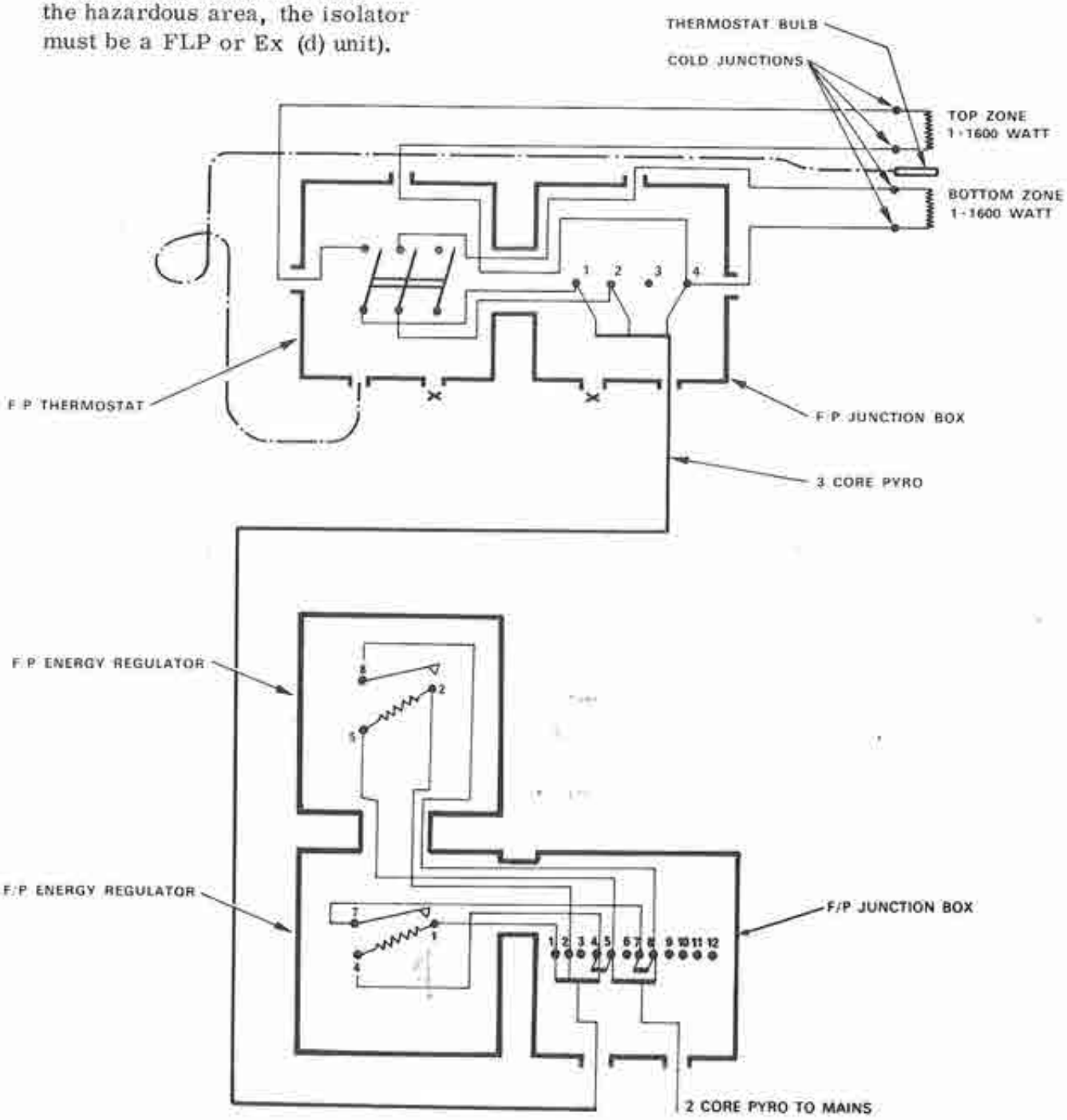

100 and 200 litre wiring diagram

HAZARDOUS AREA MANTLE

220V 3 phase 3 wire Δ

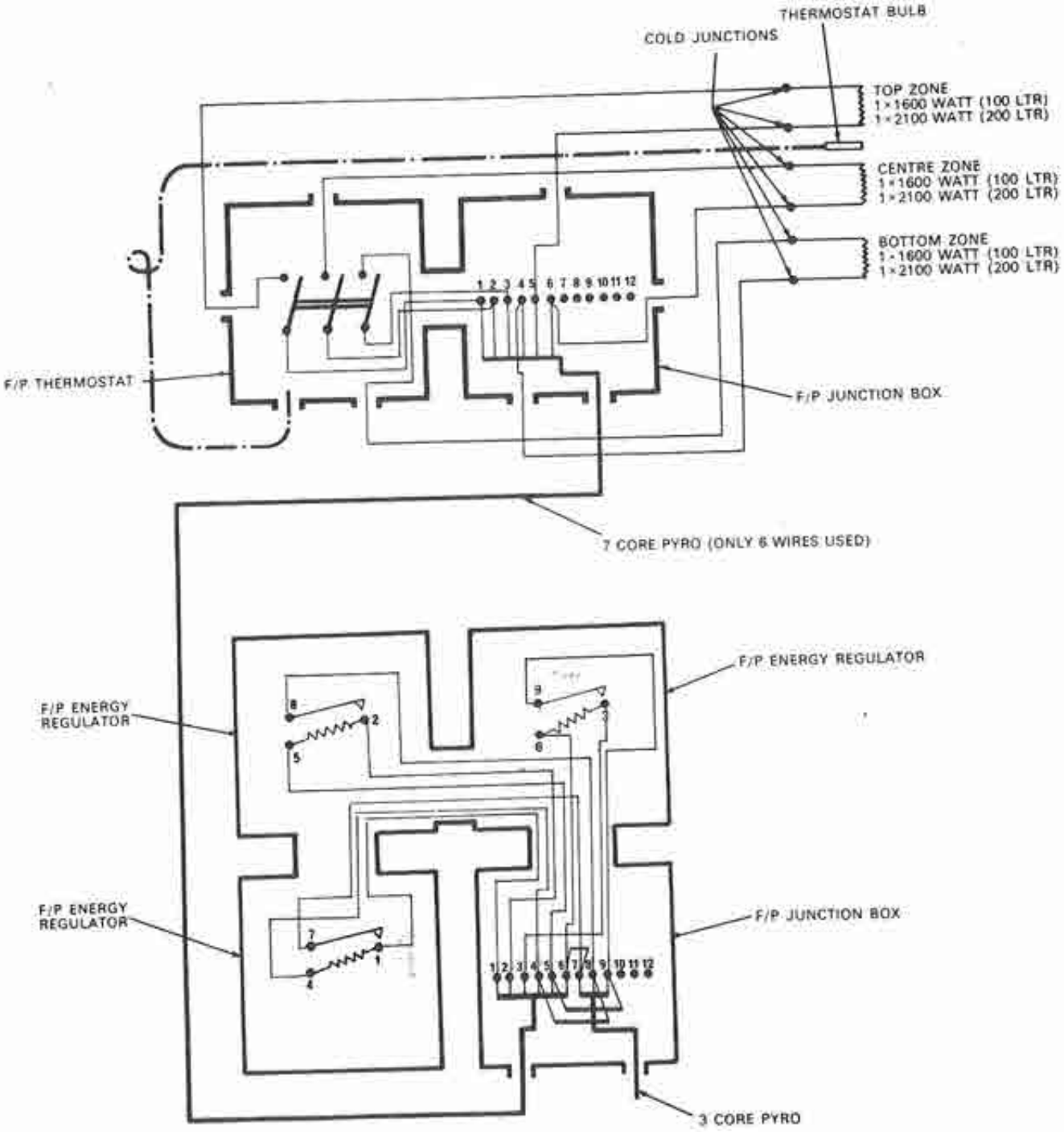

link 6–7

100 and 200 litre wiring diagram

HAZARDOUS AREA MANTLE

380-415V 3 phase 4 wire

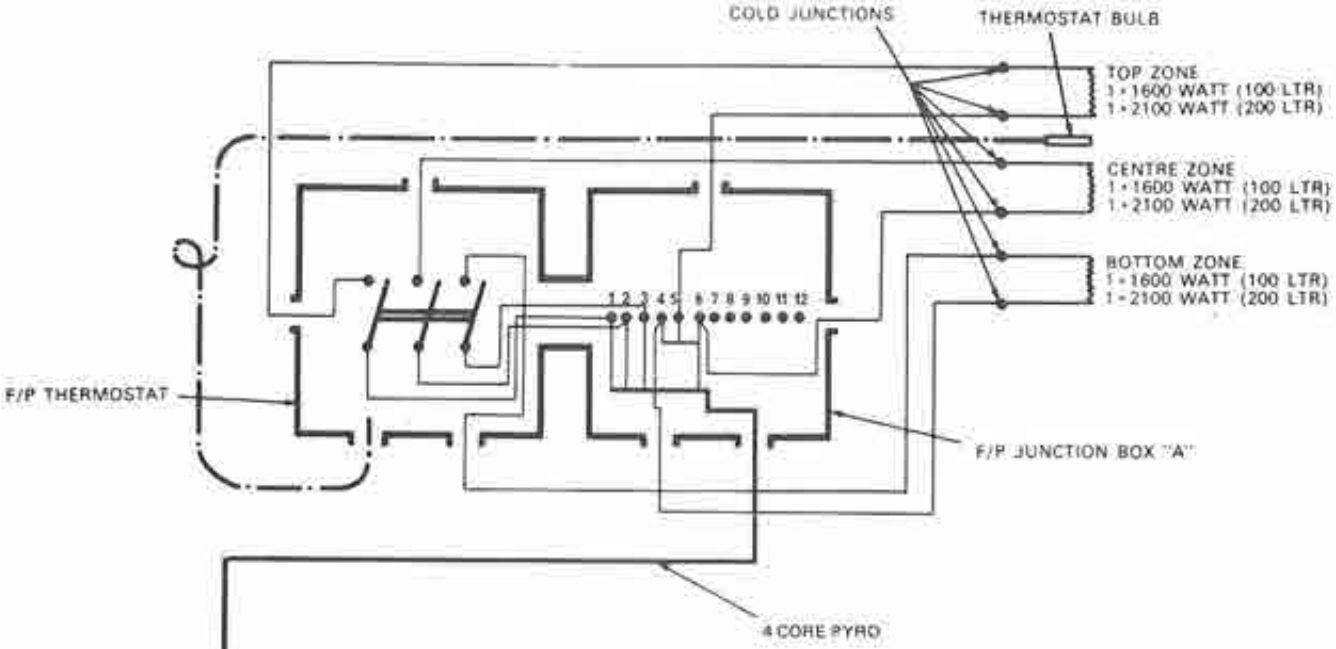

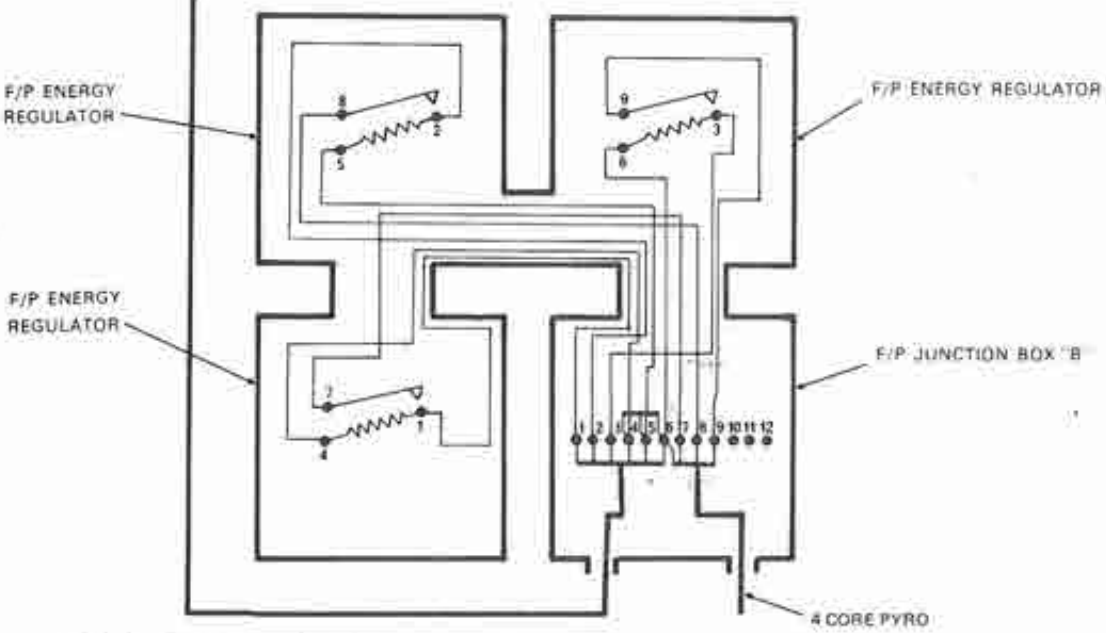

modified circuit to facilitate supply
230V single phase
220V between phases
link terminals 7, 8, 9.
NB. When connecting between 2 phases it is recommended that a double pole isolator is fitted in the supply line. (If the supply point is within the hazardous area, the isolator must be a FLP or Ex (d) unit).

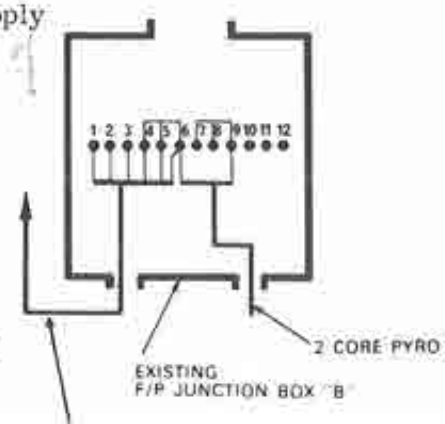

SPECIFICATION TABLES

Safe area mantle

catalogue reference	vessel size	bottom outlet size	loading	circuits
JMD 20	20 litre	75 mm	2.7 kw	2
JMD 50	50 litre	115 mm	4.5 kw	3
JMR 50	50 litre	265 mm	4.2 kw	3
JMD 100	100 litre	115 mm	6.6 kw	3
JM100R	100 litre	265 mm	6.6 kw	3
JMD 200	200 litre	115 mm	10.8 kw	3
JMR 200	200 litre	265 mm	10.8 kw	3

There is provision in the control box of the 50, 100 and 200 litre models for the variation of supply voltages by the addition of links during manufacture. The range comprises:

240V single phase 50 Hz
220V 3 phase 3 wire 50 Hz (delta)
380-415V 3 phase 3 wire 50 Hz (star and delta)
380-415V 3 phase 4 wire 50 Hz
Alternatively the mantles are available for 60 Hz supply

Hazardous area mantle

catalogue reference	vessel size	bottom outlet size	loading	circuits
JFD 20	20 litre	75 mm	1.6 kw	1
JFD 50	50 litre	115 mm	3.2 kw	2
JFR 50	50 litre	265 mm	3.2 kw	2
JFD 100	100 litre	115 mm	4.8 kw	3
JFR 100	100 litre	265 mm	4.8 kw	3
JFD 200	200 litre	115 mm	6.4 kw	3
JFR 200	200 litre	265 mm	6.4 kw	3

There is a provision in the control box of the 50, 100 and 200 litre models for the variation of supply voltages by the addition of links during manufacture. The range comprises:

240V single phase 50/60Hz
220V 3 phase 3 wire 50/60Hz (delta)
380-415V 3 phase 4 wire 50/60Hz